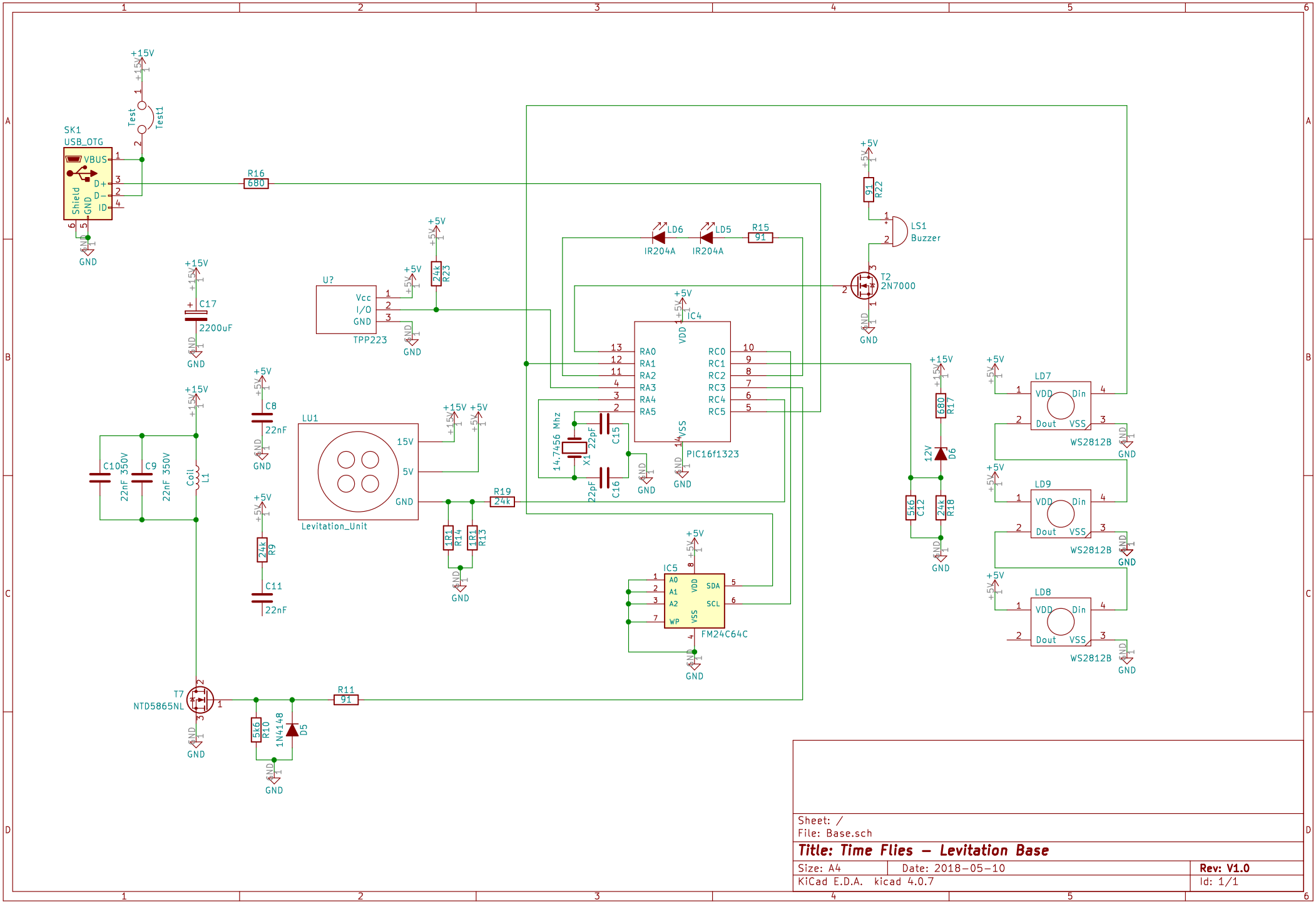

Sheet: /
File: Base.sch

Title: Time Flies – Levitation Base

Size: A4	Date: 2018-05-10	Rev: V1.0
KiCad E.D.A. kicad 4.0.7		Id: 1/1